11th International Workshop on Ship and Marine Hydrodynamics
Hamburg, Germany, September 22-25, 2019

Experimental study of an oscillating buoy Wave Energy Converter coupled with a floating breakwater

Zhan Junhua[1], Kuang Xiaofeng[1], Ni Yang[1], Zheng Wenhui[1], Zheng Xiong-bo[2],

[1]National Key Laboratory of Science and Technology on Hydrodynamics, China Ship Scientific Research Center, Wuxi 214082, China
[2]Harbin Engineering University, Harbin 150001, China

ABSTRACT

A new wave energy converter (WEC) system coupled with a floating breakwater is introduced in this paper. To analyse the dynamic performance of the WEC, an experiment device was designed and tested in two different basins. The independent experiment was conducted in a Seakeeping basin which focused on the performance of single WEC and the influence of the reflected wave. In the joint experiment, the WEC device was installed on the floating breakwater, the power generation efficiency and motion of the joint platform was measured in a deepwater offshore engineering basin. A power take-off (PTO) system was used for measuring the power generating efficiency. The following conclusions are drawn from the comparison experiment: (a) The superposition of incident wave and the reflected wave of the floating breakwater could increase the power generation efficiency and the motion of the WEC except some short wave. In several short-wave condition, the overtopping wave impacted on the top of the buoy caused the reducing of the power generation efficiency. (b) The relative motion of the buoy and the floating breakwater is larger than independent experiment condition especially in long wave which increase the power generation efficiency.

1 INTRODUCTION

Ocean waves represent a form of renewable energy derived from the winds as they blow across the oceans. Considering the enormous potential of wave energy for pollution free electricity generation, it is widely regarded to be an ideal solution for the possible energy crisis coming with the exhaustion of fossil energy. All over the world, the total wave power resource is estimated to be 2.11 Terawatt (TW). The wave energy is therefore expected to provide a significant proportion of future energy requirements without adding to environmental.

The economics of WEC can be enhanced by improving the efficiency of the system. Various efforts at improving the efficiency are shown by [1-3]. Another way to increase the attractiveness of WEC is to integrate the WEC into other maritime structures such as breakwater, pier or jetty. Previous integration work conducted on WEC and breakwater system in the North Sea region proved the effectiveness of this idea, by supplying electricity to island community and providing shelter to the near-shore area. The integration of WEC device with other marine facilities has become common especially for near shore applications. The main reason is triggered by better economic viability through cost sharing on construction, installation, maintenance and operation [4] as aligned with the main issue faced especially by the current stand-alone WEC device. Looking towards the multi-abilities provided by this integrated device, the application is effective for Remote Island [5] since it helps to reduce the use of diesel fuels for electricity production as well as securing the area through wave dissipation process. In addition, the benefit may also be shown in providing water desalination by pumping seawater through a reverse osmosis filter [6].

This paper investigates the motion and energy conversion efficiency of a WEC coupled with a floating breakwater in two different basins. In order to study the efficiency of the combined platform, we conducted the single WEC experiment in the Seakeeping basin, and then conducted the WEC and floating breakwater joint experiment in the deepwater offshore engineering basin. A PTO system was used for measuring the generating efficiency.

2 EXPERIMENTAL INVESTIGATION ON WEC

2.1 Experimental model

The model is an oscillating buoy WEC and its buoy is fixed to a metal frame. The buoy can move along the two vertical axles of the frame in the wave, springs were installed on each end of two vertical axles to protect the buoy. The floating breakwater is made up of two huge cylinders and their connecting structures. The floating breakwater is designed to be fixed in a particular sea area by several mooring cables. The Figure 1 shows the WEC model, the Figure 2 shows the floating breakwater and the WEC is installed on the breakwater. In fact, there should be two WEC symmetrically installed on the floating breakwater, we just test one WEC in the model experiment. The principal particulars of the WEC were listed in Table 1.

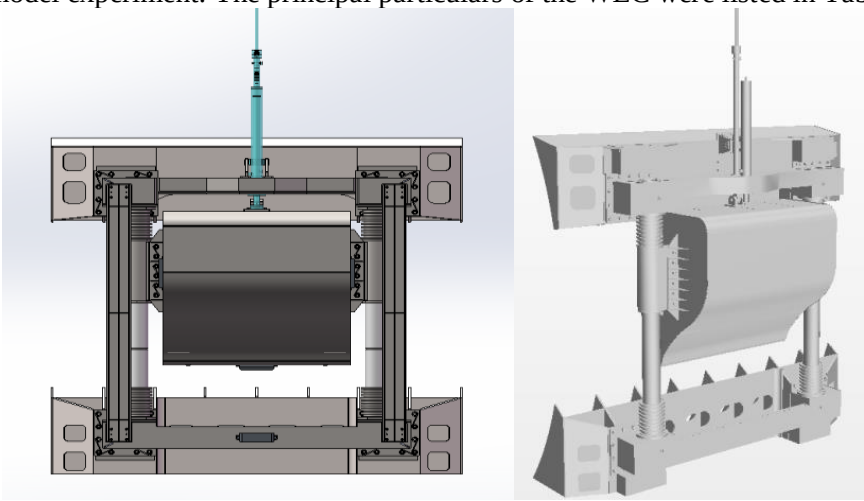

Figure 1: The WEC model

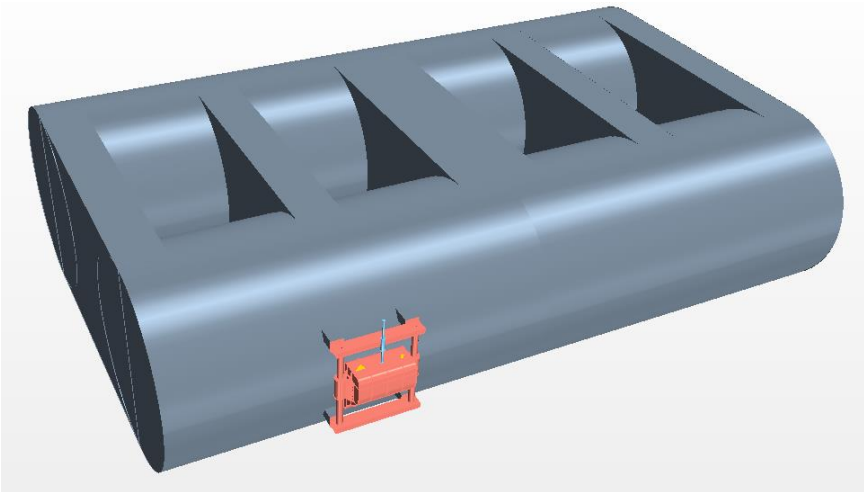

Figure 2: The WEC model fixed on the floating breakwater

Table 1: Principal particulars of the WEC

Items	Unit	Model
The width of the oscillating buoy	m	0.550
The height of the oscillating buoy	m	0.538
The weight of the oscillating buoy	kg	43.6
The travel of the vertical axle	m	0.3
The length of the breakwater	m	7.5
The width of the breakwater	m	5.0
The weight of the breakwater	ton	26.91

2.2 Experimental facilities

1. Seakeeping basin

The single WEC model experiment was carried out in the Seakeeping basin of China Ship Scientific Research Center (CSSRC), which measures 69m×46m×4 m (length × width × water depth). The 3-D wave-making system on both sides can generate regular, irregular and short-crested waves. A steel bridge of 78 m in length spans over the basin. There is a carriage under the bridge. The carriage can move forward and backward along the bridge.

2. Deepwater offshore engineering basin

The joint experiment was carried in the deepwater offshore engineering basin of CSSRC with the dimensions of 54 m×40 m×35 m. its adjustable basin bottom capable of performing model tests at variable water depth from 0 to 32 m. Deepwater or ultra deepwater offshore platform model tests in winds, waves and currents could be accomplished in the deepwater offshore engineering basin.

2.3 Experimental method

1. Experiment in Seakeeping basin

In order to study the power generation efficiency and the heave motion characters of the oscillating buoy WEC, a metal frame was designed to connect the WEC and the carriage of the Seakeeping basin, the metal frame can be hung on the two crossbeams which were at the bottom of the carriage. A backplane has been used to simulate the influence of the breakwater and its breadth is 1.25 m. Through the comparative experiment with and without backplane, we study the reflected wave's influence on the WEC. Figure show the WEC model fixed on the metal frame.

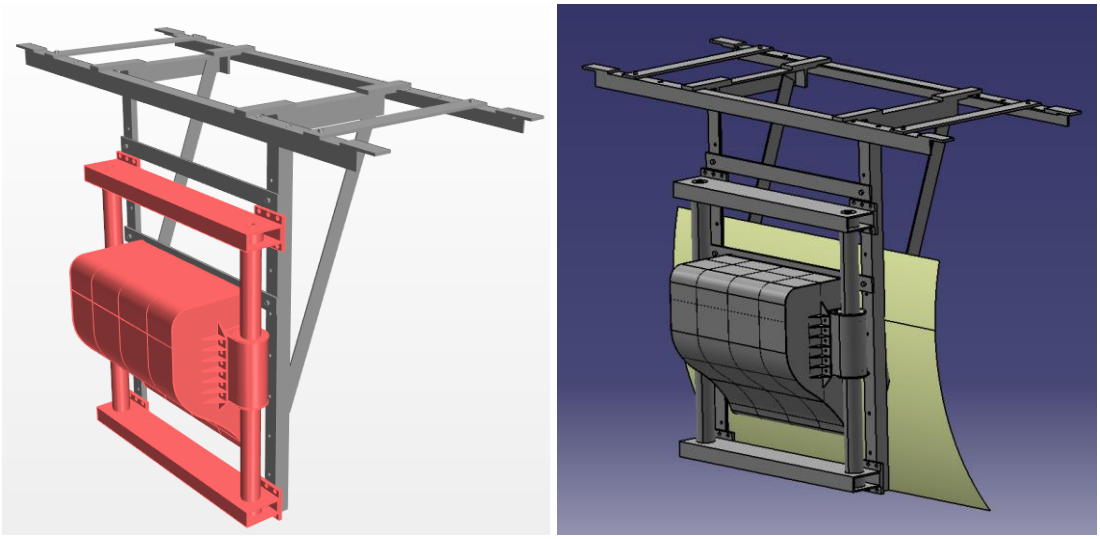

(a) WEC without the backplane (b) WEC with the backplane

Figure 3: The WEC model fixed on the metal frame

As the buoy only moves at the vertical direction, we choose a permanent magnet linear motor to generate power. The permanent magnet linear motor is consisting of stator and mover, the stator installed on the crossbeam of the WEC and the mover was fixed on the upper plane of the buoy. The buoy and the mover move together in the vertical direction in waves. A series circuit PTO system was built to measure the power generation efficiency, which including the linear motor and a resistor. The resistor is 20 Ω as same as the internal resistance of the linear motor. We measured the heave motion by the motion measuring system and an acceleration transducer, heave motion could be obtained by integrating the vertical acceleration signal.

In the experiment, we measured the voltage across and current of the resistance which is connected to the generator. We calculated the average output power in a time period based on Eq. (1) [7] and calculated energy conversion efficiency according to Eq. (2).

$$P_{out} = \frac{1}{T}\int_0^T V(t)\cdot I(t)\,dt \tag{1}$$

$$\eta = \frac{P_{out}}{P_{wave}} \tag{2}$$

Where, T is the wave period, t is time, V(t) and I(t) are the voltage and current at time t, and P_{wave} is the wave power in the range of the buoy width which is calculated as follow:

$$P_{wave} = \frac{\rho g^2 H^2 T}{32\pi} D \tag{3}$$

Where, ρ is the density of water, H is the wave height, and D is the diameter of the buoy.

The experiment conducted in regular wave with the wave period from 1.0 s to 3.5 s, different wave height was chosen in the experiment, i.e. 100 mm, and 200 mm. The wave elevation at about 3 m ahead of the WEC model was measured by a wave probe and its time histories were sampled simultaneously by a computer during the experiment.

2. Deepwater offshore engineering basin

In order to study the power generation efficiency of the WEC-Floating breakwater joint platform, a huge floating breakwater model was processed. The floating breakwater was moored to the adjustable basin bottom by 12 mooring wires. The mooring depth is 11.5 m and the mooring wires were truncated in the horizontal direction. The Figure 4 show the sketch map of the WEC model experiment coupled with the floating breakwater.

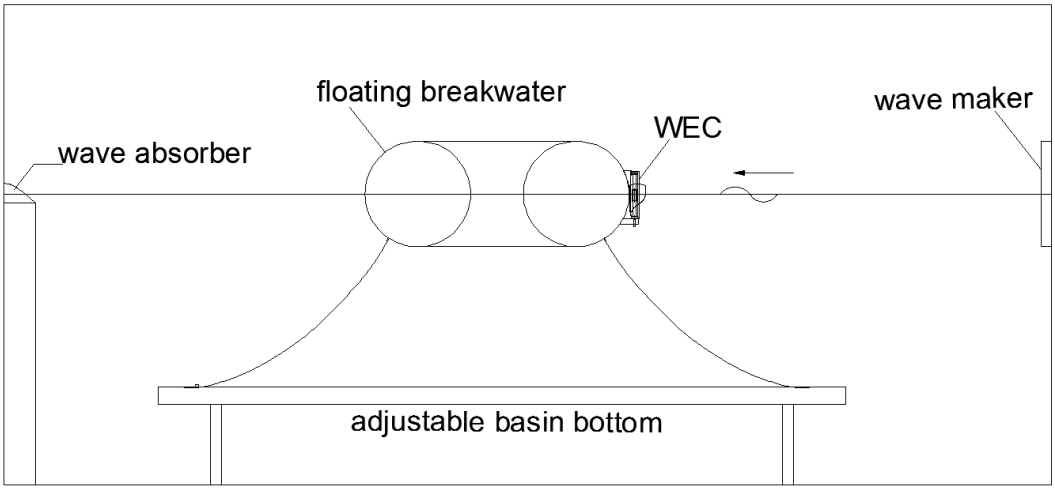

Figure 4: The sketch map of the WEC model coupled with the floating breakwater

As the floating breakwater is a huge floating body, we placed the wave probe about 10 m ahead the floating breakwater to reduce the influence of the reflected wave and the radiation wave of the floating breakwater. The regular wave was used in the experiment as the same as the experiment in Seakeeping basin. The optical motion measurement system was used for measuring the heave and pitch motion of the floating breakwater, the heave motion of the buoy was measured by an acceleration transducer.

3 EXPERIMENTAL RESULTS

1. The independent experiment

The independent experiment of the WEC model was conducted in the Seakeeping basin of CSSRC. Considering the convenience of the installation and the restriction of the carriage's structural strength, meanwhile the influence of the reflected wave was simulated, we selected the backplane with the breadth of 1.25 m, about 1/3 of the floating breakwater. The comparative experiments were conducted with and without the backplane in regular wave. We measured the voltage across the resistance of the PTO system and the heave motion of the buoy. Figure 5 is the photo of the independent experiment of the WEC model.

(a) WEC without the backplane (b) WEC with the backplane

Figure 5: The independent experiment of the WEC model

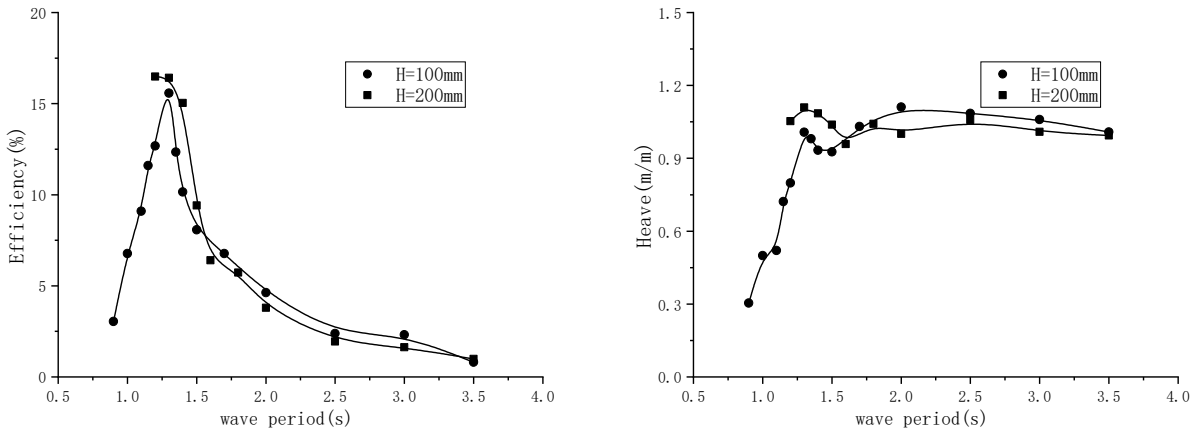

(a) Energy conversion efficiency (b) Heave motion of the WEC

Figure 6: The result of the independent experiment without backplane (H=100, 200 mm)

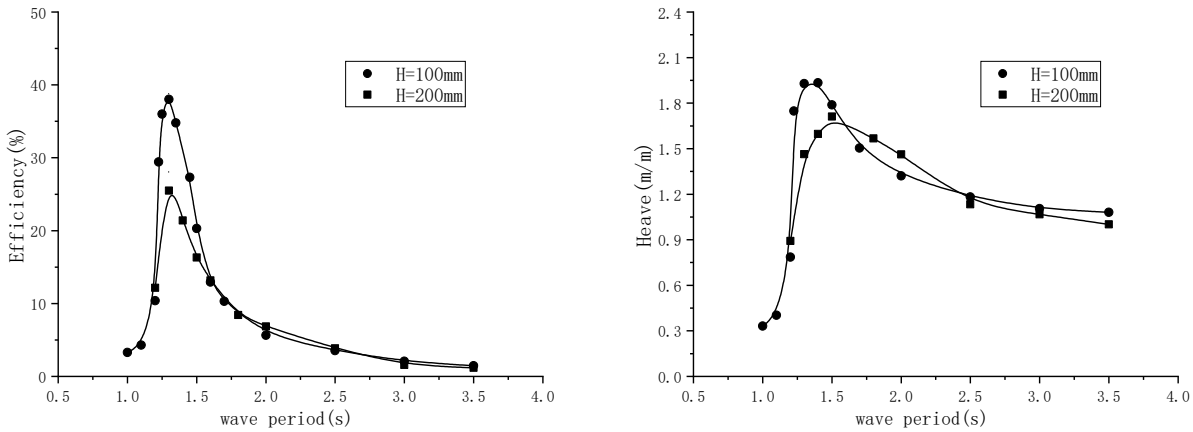

(a) Energy conversion efficiency (b) Heave motion of the WEC

Figure 7: The result of the independent experiment with backplane (H=100, 200 mm)

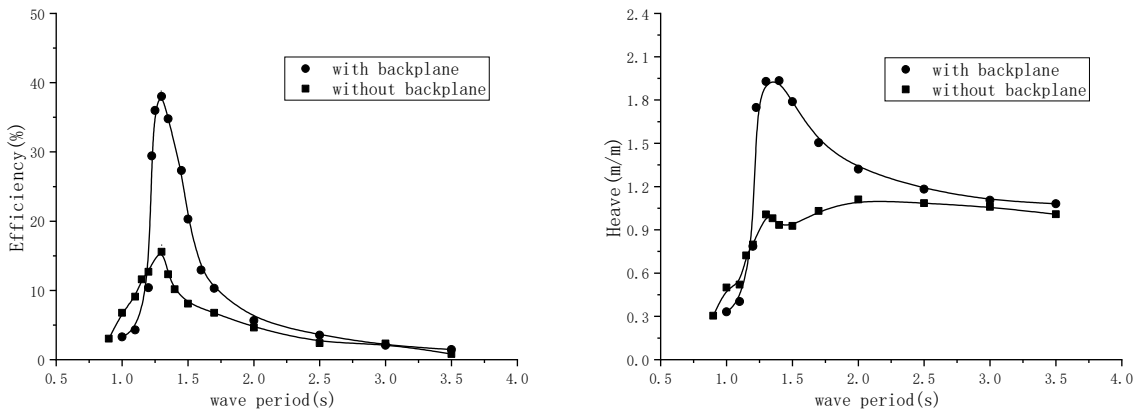

(a) Energy conversion efficiency (b) Heave of the WEC

Figure 8: Comparison result of the independent experiment (H=100 mm)

Figure 6 to figure 8 are the results of the independent WEC device model experiment, the abscissa is the model wave period, and the ordinate is the power generation efficiency or non-dimensional heave motion. The figure 6 shows the result of the independent experiment without backplane, we can find that the 200 mm regular wave result is closed to the 100 mm condition. Figure 7 shows the result of the independent experiment with backplane; the power generation efficiency and the heave motion result of the 100 mm regular wave are larger than 200 mm condition obviously. This is because the freeboard of the buoy is small, the peak period of 200 mm regular wave superposed in front of the backplane which lead to the wave overtopping wave impacted on the top of the buoy between the gap of the backplane and the buoy. The figure 8 is the comparison result of the independent experiment with and without backplane, we can find that the result of the backplane condition is much bigger than no backplane condition except several short wave. In the backplane condition, the maximum value of the power generation efficiency is 38.0% with the peak period 1.3 s, and the maximum value of the efficiency is 15.6% in no backplane condition. In several short-wave condition, the overtopping wave impacted on the top of the buoy caused the reducing of the power generation efficiency.

2. The joint experiment

The joint experiment of the WEC model coupled with the floating breakwater was conducted in the deepwater offshore engineering basin of CSSRC. We measured the voltage across the resistance of the PTO system, the heave motion of the buoy, the heave and pitch motion of the floating breakwater in regular wave with the wave height of 100 mm. Figure 9 is the photo of the joint experiment of the WEC device model coupled with the floating breakwater.

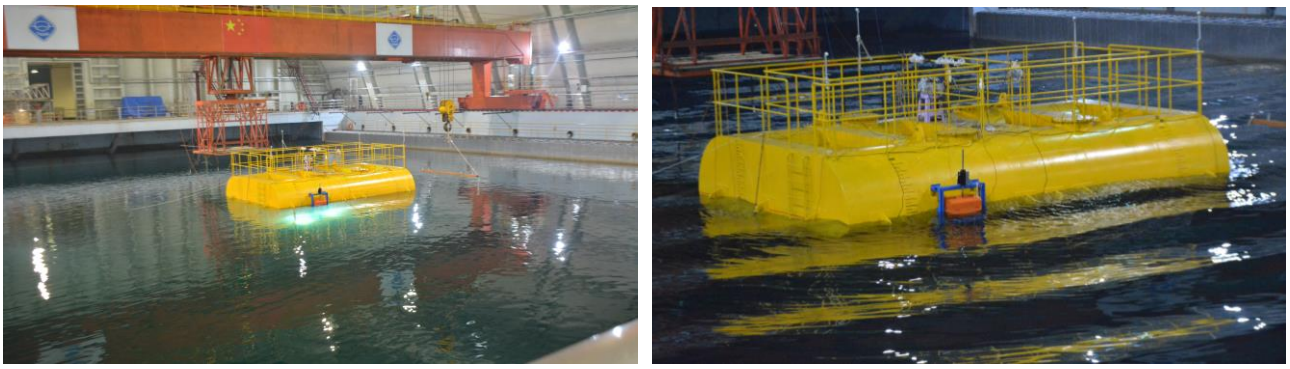

Figure 9: The joint experiment of the WEC model coupled with the floating breakwater

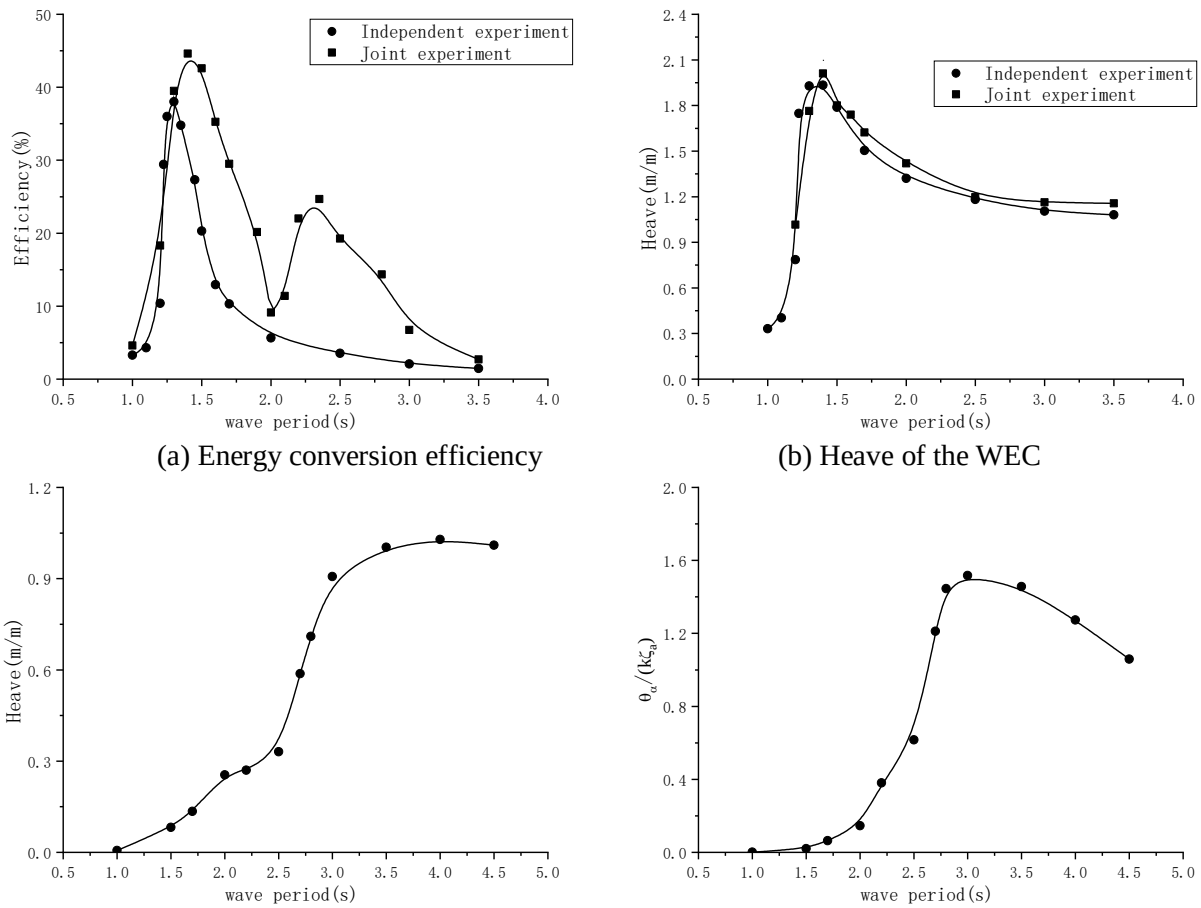

(a) Energy conversion efficiency (b) Heave of the WEC

(c) Heave of the floating breakwater (d) Pitch of the floating breakwater

Figure 10: The result of the joint experiment (H=100 mm)

Figure 10 shows the results of the joint experiment, energy conversion efficiency, heave of the buoy, heave and pitch motion was list in the figure. The results show that energy conversion efficiency of the joint platform is closed to the result of independent experiment in short wave, the heave motion results of the buoy don't have obvious difference between the comparison experiments. But the energy conversion efficiency of the joint experiment is larger than the independent experiment result with the increase of wavelengths, and another peak appears at the wave period 2.3 s. That is because the stator of the linear motor is fixed on the floating breakwater, the relative motion of the buoy and the floating breakwater is larger than independent experiment condition especially in long wave. So the energy conversion efficiency of the joint platform is larger than single WEC condition.

4 CONCLUSION

This paper introduces a WEC and a floating breakwater joint platform and studies the power generation efficiency of the WEC at different conditions. In order to study the power generation efficiency and the heave motion characters of the oscillating buoy WEC, we designed a metal frame to connect the WEC and the carriage of the Seakeeping basin, and conducted the independent experiment of the oscillating buoy WEC in the Seakeeping basin, and in order to test the power generation efficiency of the joint platform, we installed the WEC on the floating breakwater and conducted the joint experiment in the deepwater offshore engineering basin.

(a) The superposition of incident wave and the reflected wave of the floating breakwater could increase the power generation efficiency and the motion of the WEC except some short wave. In several short-wave condition, the overtopping wave impacted on the top of the buoy caused the reducing of the power generation efficiency.

(b) The relative motion of the buoy and the floating breakwater is larger than the heave motion of the single WEC especially in long wave which increases the power generation efficiency of the WEC.

REFERENCES

[1] Osanai S, Kondo H. Faesibility tests of new pendular-type wave energy conversion apparatus. Coast Eng Proc 1996.

[2] Nader J-R, Zhu S-P, Cooper P, Stappenbelt B. A finite-element study of the efficiency of arrays of oscillating water column wave energy converters. Ocean Eng 2012; 43: 72–81.

[3] Margheritini L, Kofoed JP, Victor L, Troch P. Geometrical optimization for improved power capture of multi-level overtopping-based wave energy converters. In: Proceedings of the nineth international offshore polar engineering conference; 2009. p. 339–44.

[4] Clément A, McCullen P, Falcão A. Wave energy in Europe: current status and perspectives. Renew Sustain Energy Rev 2002; 6:405–31.

[5] Zanuttigh B, Margheritini L, Gambles L, Martinelli L. Analysis of wave reflection from wave energy converters installed as breakwaters in harbour. In: Proceedings of the 8th European wave tidal energy conference (EWTEC 2009); 2009.

[6] Fadaeenejad M, Shamsipour R, Rokni SD, Gomes C. New approaches in harnessing wave energy: with special attention to small islands. Renew Sustain EnergyRev 2014; 29:345–54.

[7] Li and Yu, Y.H., 2012. A synthesis of numerical method for modelling wave energy converter-point absorbers, Renewable and Sustainable Energy Reviews, 16(6), 4352–4364.